THIS PLAN CANCELS AND TAKES THE PLACE OF PRODUCTION PLAN N: INDEX: . VOL=16.8 US= -0.3

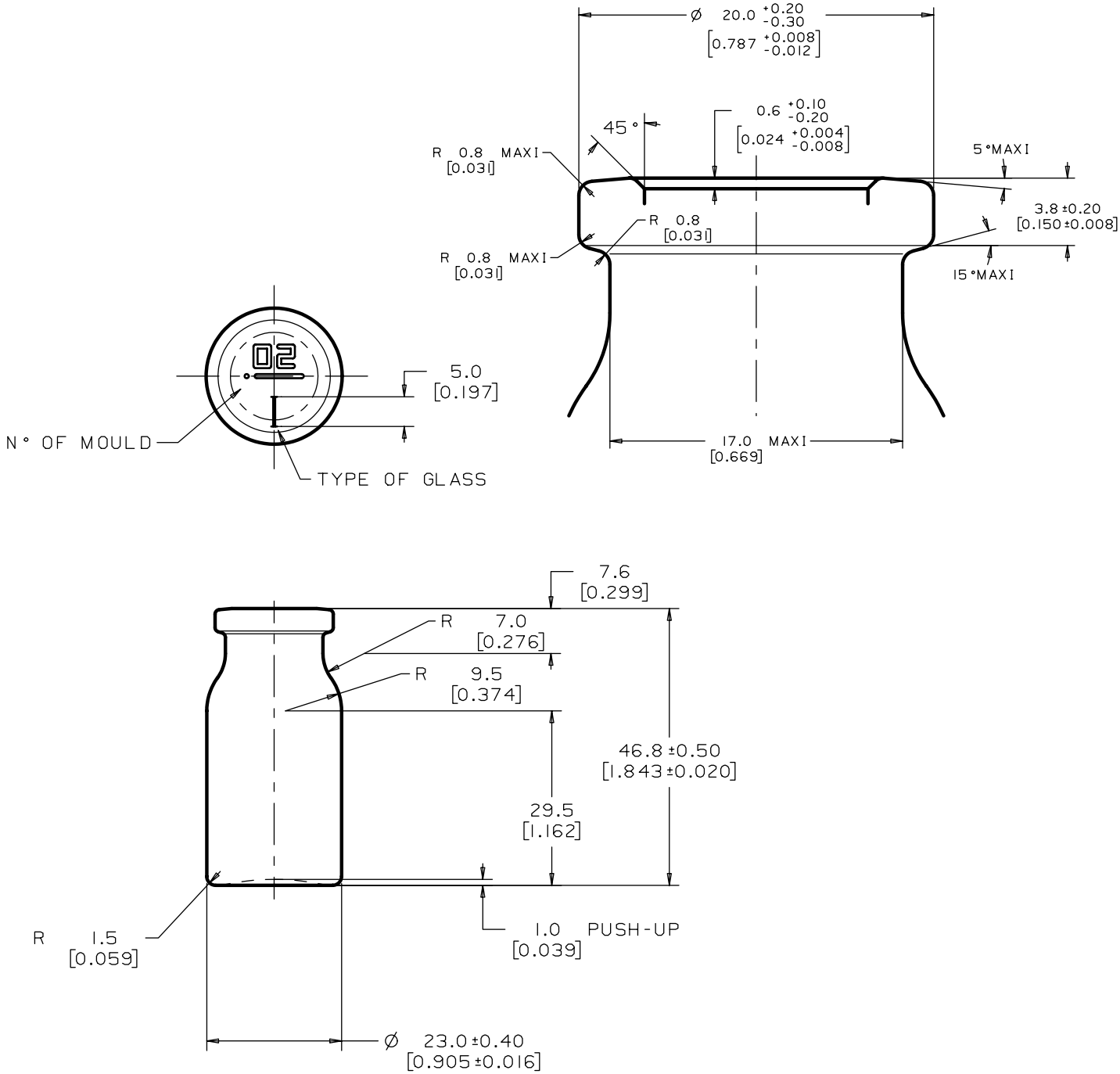

REP	DATE	NOTE	MODIFICATIONS	MOULD NO	INDEX
I	17-01-92	.	REGURALISE SUIVANT NORME ISO 8364-4	00850	39
H	06-09-84	.	REGULARISATION BAGUE	00850	39
G	21-03-84	STP	NORMALISATIONNBAGUE WI 8 OUVERTURE ETAIT 12.65	00850	39
K	.	.	.	.	.
J	01-04-99	.	REVU GRAVURE DU FOND	00850	39

NECK FINISH ISO 8362-4

Ø OPENING: 12.6 [0.496] ±0.2 [0.007] ON 1 MM DEPTH

Ø I DIMENSION MIN: 11.5 [0.452]

APPROX. WEIGHT: 16 GRAMMES

BRIMFUL CAPACITY: 10 CC ± 0.8 CC

MOULD 00850

SGD

SAINT.GOBAIN DESJONQUERES

FLACON ISO 8362-4-8H.

MACHINE: 400

DATE: 18-06-68

ED 14185

O H I J

00-00-850 BA AFTER PLAN N: . / REF . CAUSE .